1004KL (25□ x 10L)

End Of Life Product
Not Recommended for New Design

General Specifications

Motor Protection:
Auto Restart/Polarity Protection

Insulation Resistance: 10M Ω or over with a DC500V Megger

Dielectric Withstand Voltage: AC 700V 1s

Allowable Ambient Temperature Range:
-10°C ~ +60°C (Operating)
-40°C ~ +70°C (Storage)
(non-condensing environment)

Outline

Units: inch (mm)

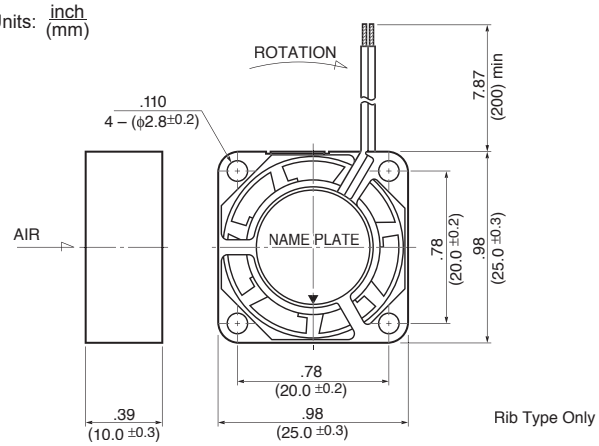

Characteristic Curves

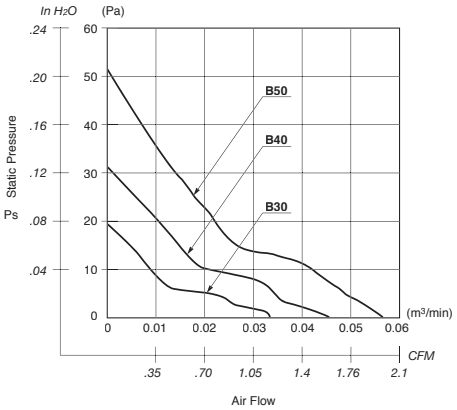

Panel Cut-outs

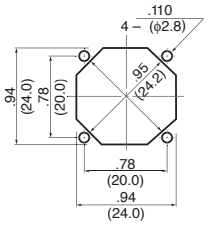

INLET SIDE / OUTLET SIDE

Material

Casing : Plastic (Black) 94V-0
Impeller : Plastic (Black) 94V-0
Bearing : Ball Bearing
Lead Wire: UL1061, AWG26, +Red, -Black

Specifications

MODEL	Product No.	Rated Voltage (V)	Operating Voltage (V)	Current (A)*1	Input Power (W)*1	Speed (min⁻¹)*1	Max. Air Flow CFM*1	Max. Air Flow (m³/min)*1	Max. Static Pressure in H2O	Max. Static Pressure (Pa)*1	Noise (dB)*1	Mass (g)
1004KL-01W-**B30**-	X00	5	4.5 ~ 5.5	0.065	0.325	7000	1.2	0.034	.078	19.5	20.0	7.5
1004KL-01W-**B40**-	X00	5	4.5 ~ 5.5	0.085	0.425	9000	1.6	0.046	.126	31.6	22.0	7.5
1004KL-01W-**B50**-	X00	5	4.5 ~ 5.5	0.125	0.625	11000	2.0	0.057	.20	50.6	25.0	7.5
1004KL-04W-**B30**-	X00	12	8 ~ 13.8	0.035	0.42	7000	1.2	0.034	.078	19.5	20.0	7.5
1004KL-04W-**B40**-	X00	12	8 ~ 13.8	0.045	0.54	9000	1.6	0.046	.126	31.6	22.0	7.5
1004KL-04W-**B50**-	X00	12	8 ~ 13.8	0.060	0.72	11000	2.0	0.057	.20	50.6	25.0	7.5

Rotation: Clockwise Airflow Outlet: Air Out Over Struts *1: Average Values in Free Air