Minebea

PM25S-024

15°

15°

PM

Outline

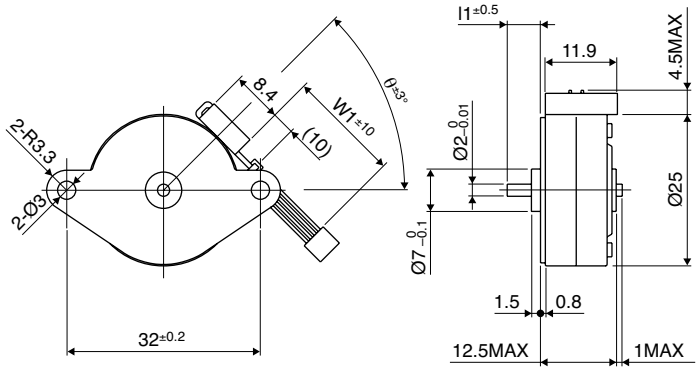

*Please contact our sales for inventory and lot information. Specification may be changed without notice.

Specifications

Number of Steps per Rotation	Drive Method	Drive Circuit	Drive Voltage	Current/Phase	Coil Resistance/Phase	Drive IC
24 (15°/Step)	2-2 Phase	Unipolar Const. Volt.	24 [V]		70 [Ω]	2SC3346
		Bi-Polar Chopper	24 [V]	300 [mA]	20 [Ω]	UDN2916B-V

Magnet Material	Insulation Resistance	Dielectric Strength	Class of Insulation	Operating Temperature	Storage Temperature	Operating Humidity
Nd-Fe-B bonded magnet (MS70)	100M [Ω] MIN	AC 500 [V] 1 [min]	CLASS E (except lead wire)	-10 [°C] ~ 50 [°C]	-30 [°C] ~ 80 [°C]	20 [%] RH ~ 90 [%] RH

Torque/Speed Characteristics

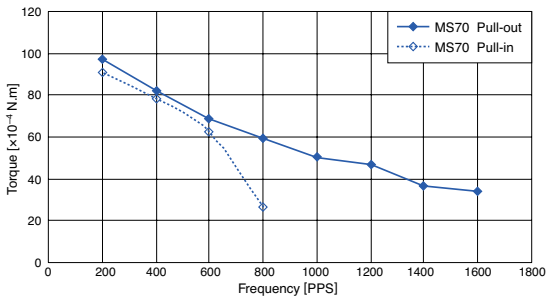

PM25S-024 UNI-CONST. V(at 24[V],70[Ω])

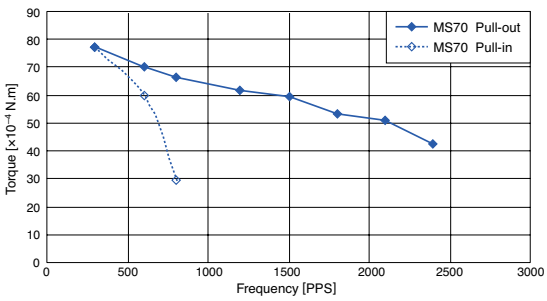

PM25S-024 BI-CHOPPER(at 24[V],20[Ω],300[mA])

These torque values are reference only. Heat radiation conditions and temperature rise effect by duty are different on each equipment, therefore please select motors after considering the actual equipment.

Applications

- OA Equipment: Printers/Scanners
- Automotive: Meters
- Home Electric Appliances: Gas Range
- Home Automation Appliances: Sewing machines

Copyright Minebea Co., Ltd.