1608VL (40□ x 20L)

General Specifications

Motor Protection:
Auto Restart/Polarity Protection

Insulation Resistance:
10M Ω or over with a DC500V Megger

Dielectric Withstand Voltage: AC 700V 1s

Allowable Ambient Temperature Range:
-10°C ~ +70°C (Operating)
-40°C ~ +70°C (Storage)
(non-condensing environment)

Expected Life

Failure Rate: 10%
25°C 50,000 Hours (B00)

Characteristic Curves

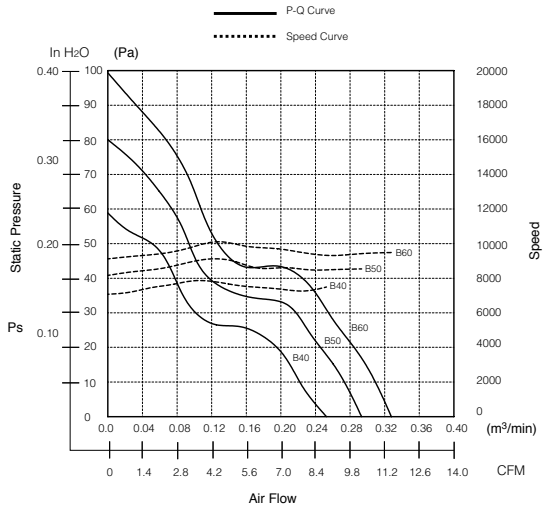

Material

Casing : Plastic (Black) 94V-0
Impeller : Plastic (Black) 94V-0
Bearing : Ball Bearing
Lead Wire : UL1007, AWG26, +Red, -Black

Outline

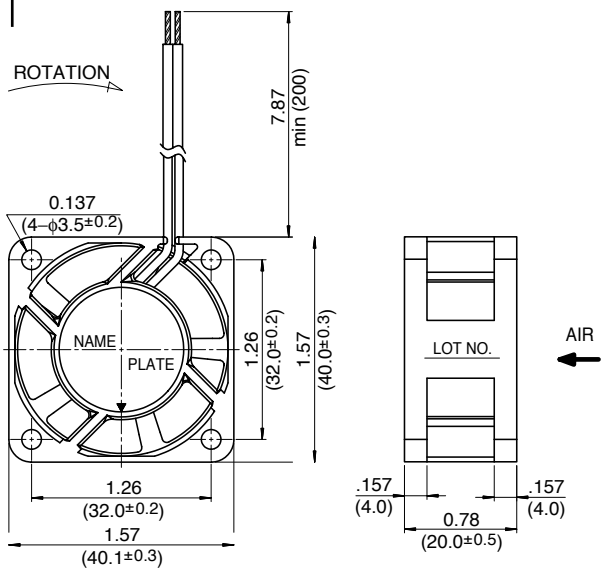

Panel Cut-Outs

Units: inch (mm)

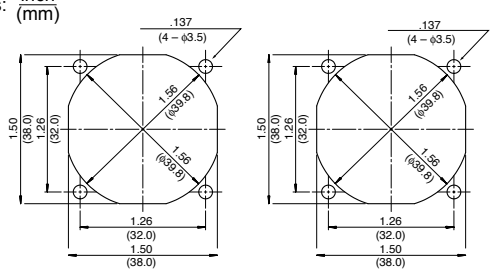

Specifications

MODEL	Product No.	Rated Voltage (V)	Operating Voltage (V)	Current (A)*1	Input Power (W)*1	Speed (min⁻¹)*1	Max. Air Flow CFM*1	Max. Air Flow (m³/min)*1	Max. Static Pressure in H2O	Max. Static Pressure (Pa)*1	Noise (dB)*1	Mass (g)
1608VL-04W-**B40**-	BXX	12	7.0 ~ 13.2	0.08	1.02	7500	8.8	0.25	.24	58.8	29.0	40
1608VL-04W-**B50**-	BXX	12	7.0 ~ 13.2	0.11	1.32	8500	10.2	0.29	.31	76.6	31.4	40
1608VL-04W-**B60**-	BXX	12	7.0 ~ 13.2	0.13	1.56	9500	11.3	0.32	.40	99.3	34.6	40
1608VL-05W-**B40**-	BXX	24	14.0 ~ 26.4	0.05	1.20	7500	8.8	0.25	.24	58.8	29.0	40
1608VL-05W-**B50**-	BXX	24	14.0 ~ 26.4	0.07	1.68	8500	10.2	0.29	.31	76.6	31.4	40
1608VL-05W-**B60**-	BXX	24	14.0 ~ 26.4	0.10	2.40	9500	11.3	0.32	.40	99.3	34.6	40

Rotation: Clockwise Airflow Outlet: Air Out Over Struts *1: Average Values in Free Air