NMB-MAT

EMINEBEA.COM

3110GL (80□ x 25L)

DC Axial Fans

General Specifications

Motor Protection:
Auto Restart/Polarity Protection

Insulation Resistance: 10M Ω or over with a DC500V Megger

Dielectric Withstand Voltage: AC 700V 1s

Allowable Ambient Temperature Range:
-10°C ~ +60°C (Operating)
-40°C ~ +60°C (Storage)
(non-condensing environment)

Expected Life

Failure Rate: 10%
25°C 60,000 Hours (P00)

Panel Cut-outs

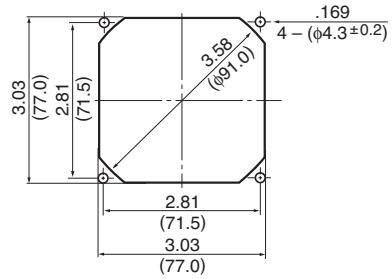

INLET SIDE / OUTLET SIDE

Outline

Units: inch (mm)

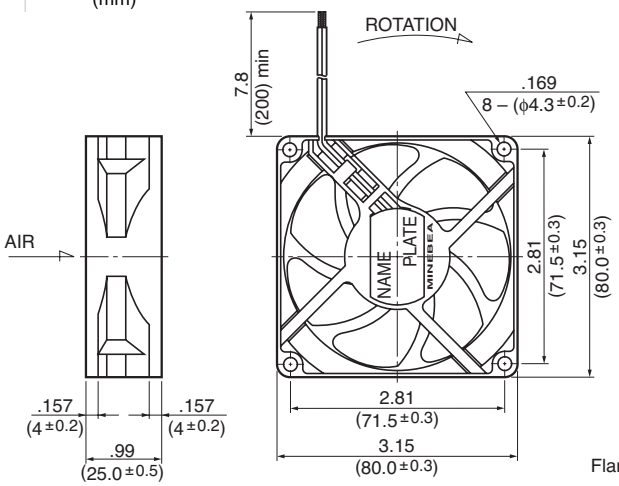

Flange Type

Characteristic Curves

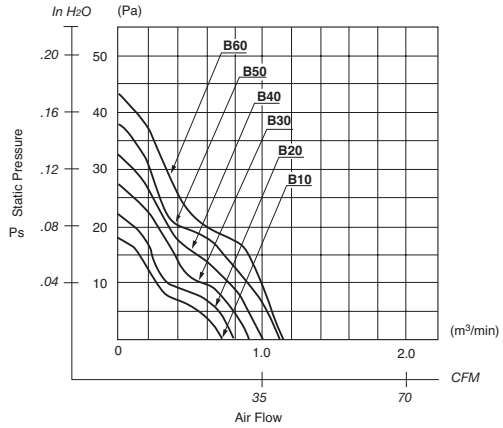

Material

Casing : Plastic (Black) 94V-0
Impeller : Plastic (Black) 94V-0
Bearing : Ball Bearing
Lead Wire : UL1007, AWG26, +Red, -Black

Specifications

MODEL	Product No.	Rated Voltage (V)	Operating Voltage (V)	Current (A)*1	Input Power (W)*1	Speed (min-1)*1	Max. Air Flow CFM*1	Max. Air Flow (m3/min)*1	Max. Static Pressure in H2O	Max. Static Pressure (Pa)*1	Noise (dB)*1	Mass (g)
3110GL-B4W-**B10**-	P00	12	6.0 ~ 13.8	0.10	1.20	2150	24.7	0.70	.067	16.7	22	95
3110GL-B4W-**B20**-	P00	12	6.0 ~ 13.8	0.11	1.32	2400	28.2	0.80	.086	21.6	25	95
3110GL-B4W-**B30**-	P00	12	6.0 ~ 13.8	0.17	2.04	2700	31.8	0.90	.110	26.5	28	95
3110GL-B4W-**B40**-	P00	12	6.0 ~ 13.8	0.20	2.40	3000	35.3	1.00	.130	32.3	31	95
3110GL-B4W-**B50**-	P00	12	6.0 ~ 13.8	0.23	2.76	3250	38.8	1.10	.150	37.2	34	95
3110GL-B4W-**B60**-	P00	12	6.0 ~ 13.0	0.26	3.12	3400	40.2	1.14	.160	40.2	35	95
3110GL-B5W-**B10**-	P00	24	10.0 ~ 27.6	0.06	1.44	2150	24.7	0.70	.067	16.7	22	95
3110GL-B5W-**B20**-	P00	24	10.0 ~ 27.6	0.07	1.68	2400	28.2	0.80	.086	21.6	25	95
3110GL-B5W-**B30**-	P00	24	10.0 ~ 27.6	0.08	1.92	2700	31.8	0.90	.110	26.5	28	95
3110GL-B5W-**B40**-	P00	24	10.0 ~ 27.6	0.10	2.40	3000	35.3	1.00	.130	32.3	31	95
3110GL-B5W-**B50**-	P00	24	10.0 ~ 27.6	0.12	2.88	3250	38.8	1.10	.150	37.2	34	95
3110GL-B5W-**B60**-	P00	24	10.0 ~ 26.4	0.14	3.36	3400	40.2	1.14	.160	40.2	35	95

Rotation: Clockwise Airflow Outlet: Air Out Over Struts *1: Average Values in Free Air